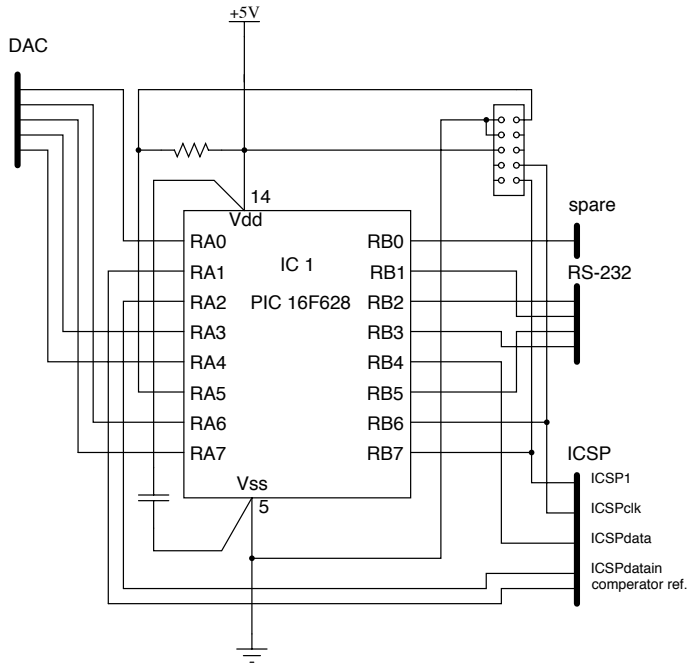
+5V
DAC
14
Vdd
RA0
RA1
RA2
RA3
RA4
RA5
RA6
RA7
IC 1
PIC 16F628
RB0
RB1
RB2
RB3
RB4
RB5
RB6
RB7
Vss
5
spare
RS-232
ICSP
ICSP1
ICSPclk
ICSPdata
ICSPdatain
comperator ref.

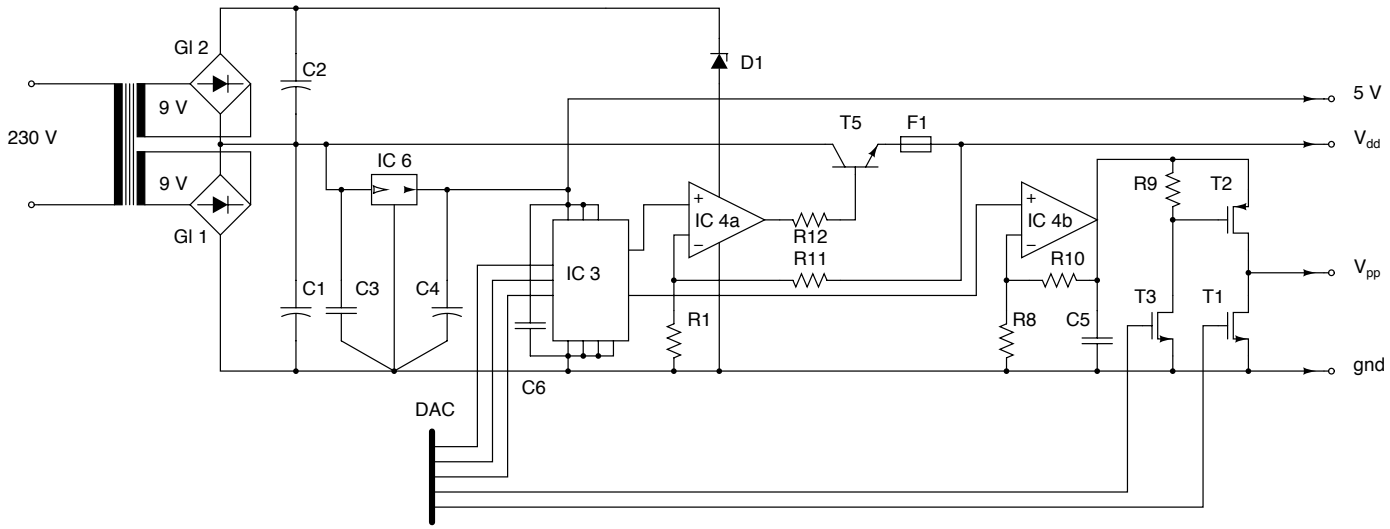
Gl 2
9 V
230 V
9 V
Gl 1
C2
C1
C3
C4
IC 6
D1
T5
F1
IC 3
IC 4a
R12
R11
R1
C6
DAC
IC 4b
R10
R8
C5
R9
T2
T3
T1
5 V
V_{dd}
V_{pp}
gnd

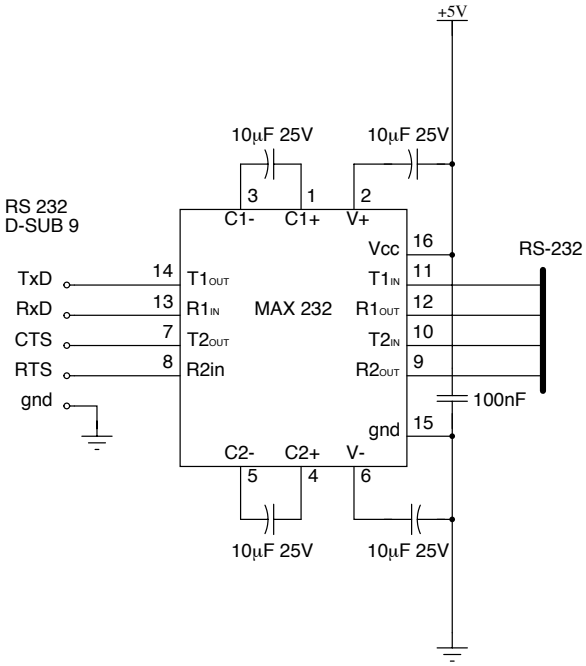
+5V
10µF 25V
10µF 25V
RS 232
D-SUB 9
3
1
2
C1-
C1+
V+
Vcc
16
RS-232
TxD
14
T1OUT
T1IN
11
RxD
13
R1IN
MAX 232
R1OUT
12
CTS
7
T2OUT
T2IN
10
RTS
8
R2in
R2OUT
9
gnd
100nF
gnd
15
C2-
C2+
V-
5
4
6
10µF 25V
10µF 25V

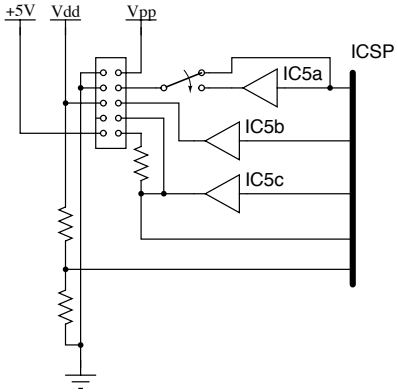
+5V
Vdd
Vpp
ICSP
IC5a
IC5b
IC5c